"Made in Fujitec"

Fujitec is Creating and Leading the New Global Standard for Elevators.

By manufacturing safe and reliable elevators in-house, we are building trust with people around the world.

Fujitec's "Global Common Components" are used in the REXIA brand. The quality of components, such as traction machines, elevator controllers, and operating fixtures, is controlled through Fujitec's integrated system of global quality management. Elevators with the same high quality will be provided by Fujitec's global supply chain under the concept of "Made in Fujitec."

Excellent Performance

The permanent magnetic synchronous gearless motors, which have been designed and developed by Fujitec, provide the utmost reliability and excellent driving performance. These motors reflect 68 years of accumulated know-how through our technological achievements in elevator manufacturing, which spans from product designing to fabrication.

Reliable Operation

Since all control-related components, ranging from control circuits to inverters, were independently developed by Fujitec, highly reliable elevator operation is established. In the event of an elevator malfunction, the elevator control system assembled with our components immediately detects the malfunction and maintains efficient and stable operation.

Universal Design

Under our universal designs, aesthetically refined buttons, displays, etc. on elevator operating fixtures are highly visible. Passengers will have a superb and comfortable riding experience.

Styles

Various decoration styles for the elevator interior and landing floors are offered by Fujitec. Customers can select the most suitable decorative materials for car panels, car ceilings, car floorings, car operating boards, and landing fixtures.

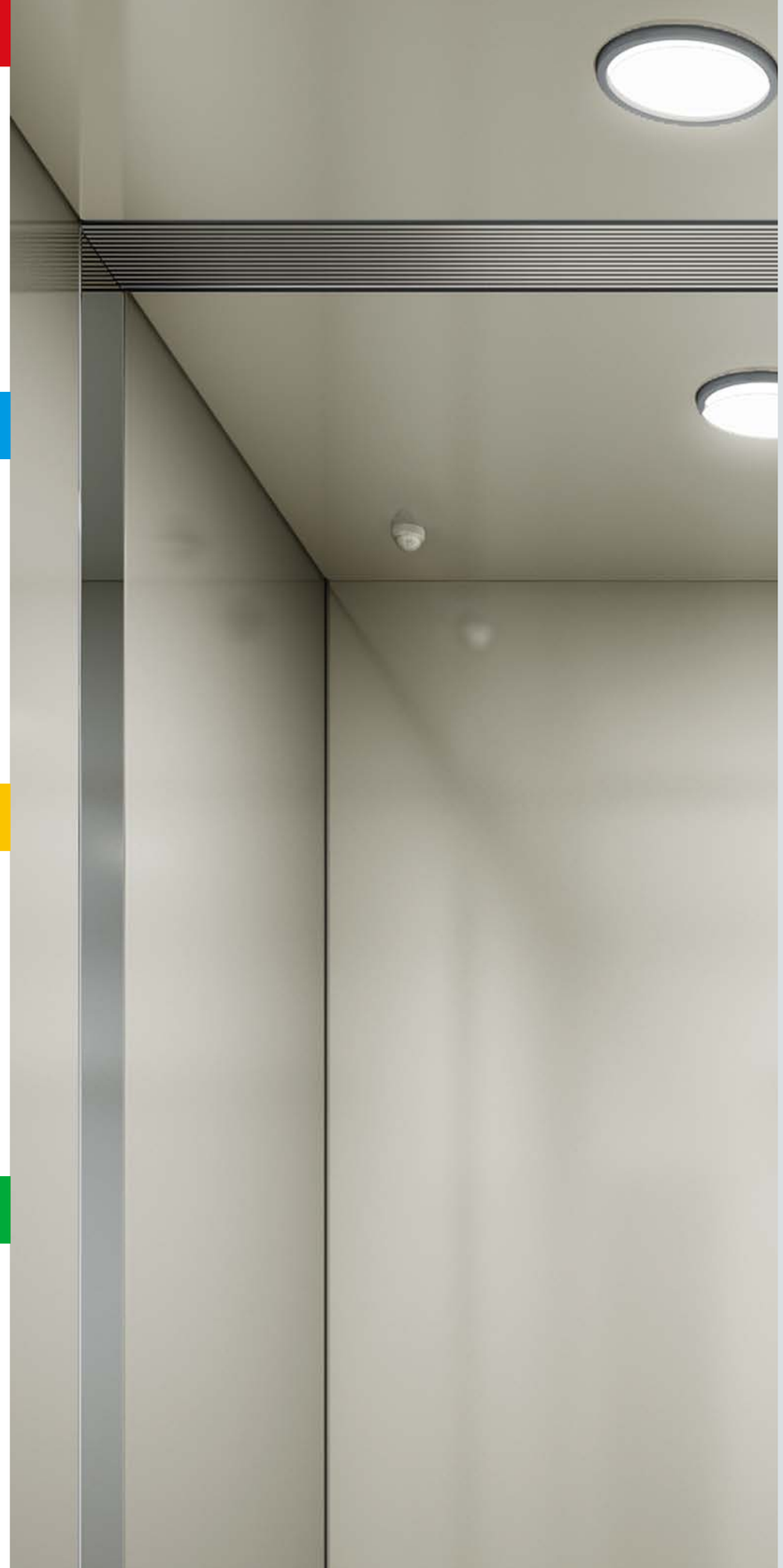

REXIA
Machine-Room-Less Elevator

CONTENTS

Excellent Performance

Gearless Traction Machine with Permanent Magnetic Synchronous Motor

The gearless traction machines with a permanent magnet synchronous motor assure high riding comfort quality and low power consumption.
This newly adopted technology reduces the weight and size of a traction machine, because gears are no longer required for elevator speed control.

No Elevator Machine Room Results in Space Saving

Our REXIA elevators require no machine room space. This remarkable feature results in a reduction of building construction cost and allows building architects to maximize floor design without needing to factor in machine rooms of conventional elevators.

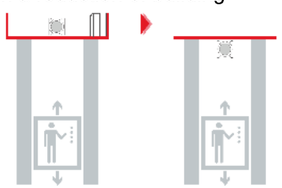

In addition, REXIA's small machines require less motor capacity and power consumption compared to conventional elevators.
The differences are shown below.

Given elevator operating conditions:
1) The maximum number of elevator operations per day: 600 times
2) The travel distance in a single operation: 30 meters
3) The rated speed: 1.0 meter per second
4) The rated load: 1200 kgs.

REXIA Elevator (PMGL)
Conventional Elevator (ACGD)

Required Motor Capacity

8.5 kW
9.0 kW

Electrical Usage per Month*1

646 kW / month*2 ⟷ 22% Energy Saving
827 kW / month

*1 : The number of days in a single month is assumed as 30 days.
*2 : Electrical usage might vary depending on site conditions.

Ultra-Slim Door Operator with Permanent Magnetic Synchronous Motor

Fujitec's new door operators have adopted a permanent magnetic synchronous motor which doesn't have any gears for door speed control. The use of this motor reduces the size of a door operator and achieves smooth and precise door operation.

These new door operators consume approximately 35 % less power than conventional ones.

Distributed Control System

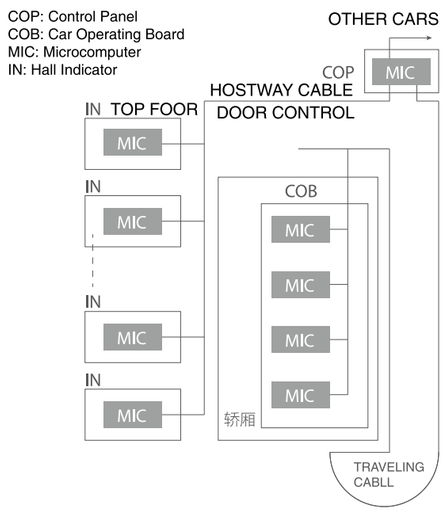

- A 32-bit data bus provides high-speed and high-precision data transmission of input-output command signals between each microprocessor located in control panels, hall-call / car-call buttons, hall indicators and hall lanterns.
- High-speed data transfer with multiple protocols enables large-scale data processing at ten times the normal speed. This also improves the ability to monitor elevator running speed, landing precision and operating reliability as well as input-output command signals of car operating fixtures and operation indicators.
- The bus system is employed for data transmission between microcomputers located in every hall-call fixture, car operating board, and control panel. This bus system has strong protection against signal interference and has system-extending capability.

An elevator operation system with multiple microcomputers makes maximum use of a "Distributed Control System." Hall indicators, car operating boards, and control panels incorporate high-performance microcomputers. These independent microcomputers analyze elevator operating conditions utilizing self-diagnostic functions and implement immediate control of elevator operations. Also, data transmission buses between microcomputers increase data processing capability.

Reliable Operation

Unintended Car Movement Protection (UCMP)

A safety-purpose control circuit independent of the elevator operating system detects unintended movement of a car and prevents the car from moving from the floor with its doors open. This function increases passenger safety.

FLEX-NX series *-Elevator Group Supervisory Control System-*

Fujitec has adopted the "Virtual Passenger Optimization Method" as a new elevator group control system.
This system controls elevator group operation by virtually calculating passenger waiting time in advance based on past accumulated data, such as passenger travel patterns and passenger volume at each floor. Also, this method comprehensively calculates passenger waiting time based on extrapolated data of probable future passengers, how many passengers will come to a certain floor when a hall call is registered and/or how many passengers will come to a certain floor when no hall call is registered.
This comprehensive analysis reflects whole building traffic conditions for efficient elevator operation control as well as reducing daily passenger waiting time by up to 10 %.

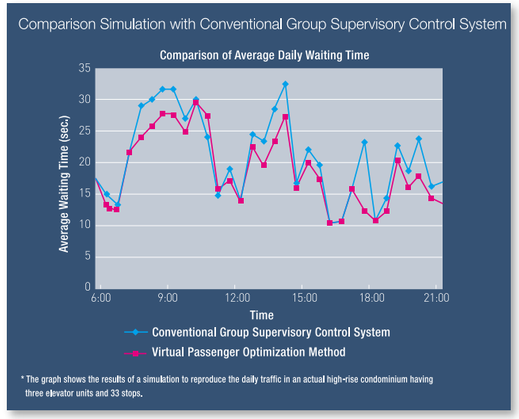

* The graph shows the results of a simulation to reproduce the daily traffic in an actual high-rise condominium having three elevator units and 33 stops.

EZSHUTTLE *- Destination Floor Guidance System -*

In an elevator operating system with EZSHUTTLE, passengers are required to register their destinations at the elevator floors rather than conventionally registering them inside the elevator. The EZSHUTTLE system then guides passengers to their assigned elevators, which will have been selected to minimize the number of destination stops based on the registered destinations.

This passenger guidance and elevator assignment provides passengers with uncongested elevator service and a reduction in passenger riding time by 50% at peak travel periods.

* Based on comparisons of passenger riding time obtained under a conventional elevator operating system and that under a simulated EZSHUTTLE-equipped elevator operating system.

Universal Design

Fujitec's new global-standard operating fixtures reflect the latest in Human Engineering technology. Fixture buttons with clearly visible lettering function as the man-machine interface. Passengers can register their destination in a visually intuitive manner.

Newly Adopted Lettering	Former Standard Lettering
23569	23569

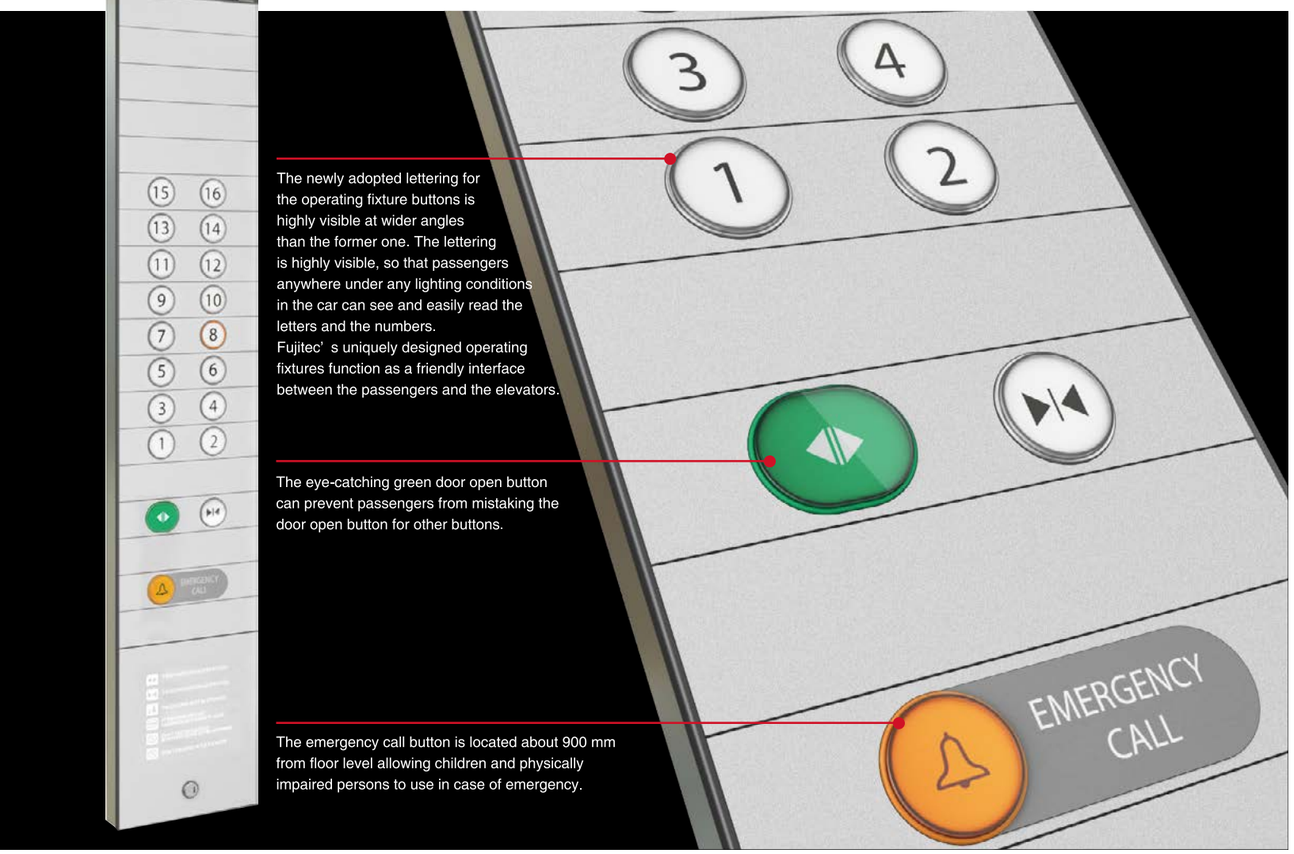

The newly adopted lettering for the operating fixture buttons is highly visible at wider angles than the former one. The lettering is highly visible, so that passengers anywhere under any lighting conditions in the car can see and easily read the letters and the numbers.
Fujitec' s uniquely designed operating fixtures function as a friendly interface between the passengers and the elevators.

The eye-catching green door open button can prevent passengers from mistaking the door open button for other buttons.

The emergency call button is located about 900 mm from floor level allowing children and physically impaired persons to use in case of emergency.

Night-Time Self-Checking Operation

- A safety enhancement for increased reliability -

Mechanical brake conditions are automatically checked by moving the elevator during the night time while not receiving any car and hall calls. This night-time self-checking operation increases passenger safety and contributes to a high after-sales product quality.

IONFUL

- Plasmacluster™* Ion Generating Device -

Plasmacluster is a trademark of sharp Coporation

Fujitec is the first elevator company to have installed a Plasmacluster Ion generating device in an elevator. This device built in a car's ventilation unit disinfects airborne mold, bacteria, viruses, allergens, and odor molecules as well as creating clean air in the elevator which enhances passenger comfort.

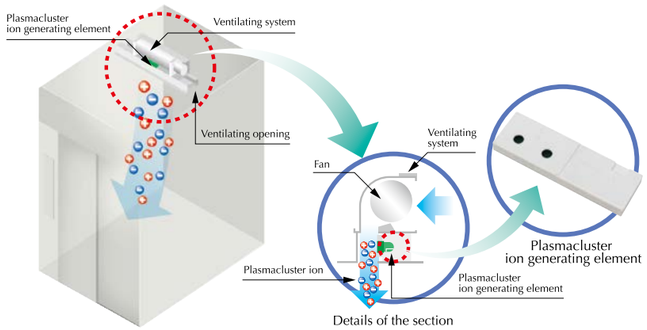

Multi-Beam Sensor

Multi-beam Sensor emits multiple infrared beams, creating an invisible curtain covering the entire doorway. If any of the beams is interrupted, the closing doors will stop and reopen.
This function results in a significantly higher detection rate of a passenger and/or an object in the doorway.

LED DownLights on Car Ceiling

For car ceiling lighting, Fujitec adopts LED downlights, which are long-lasting and energy-efficient. This adoption contributes to the protection of the environment.

	Filament Light Bulb	LED Light Bulb	Improvement Results
Lifetime	**approx. 1,500 hours**	**approx. 20,000 hours**	**approx. 13 times**
Wattage	**90W**	**9W**	**1/10 (one-tenth)**

VONIC (Automatic Voice Announcement System)

(Optional Specification)

A computerized voice system (English) provides passengers with timely information about car directions, car arrivals, door opening and closing, and emergencies, etc.
[At the customer's request, announcements in other languages can be added.]

STYLES

Ceiling Design

Standard **Optional**

CE-g1

Flat Panel:
Steel Sheet with Color Paint

Light :
LED (White)

CE-g5

Flat Panel:
Steel Sheet with Color Paint

Light :
Downlight (10W, LED)
Emergency Light(1W,LED)

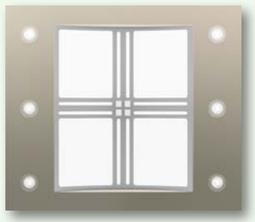

CE-c1

Arch-Shaped Part:
Milky-White Acrylic Sheet

Flat Part:
Steel Sheet with Color Paint

Light:
LED+ Downlight(3W, LED)
Emergency Light(5W,LED)

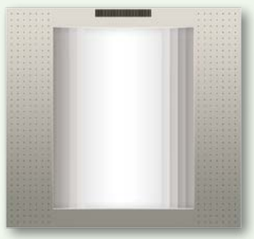

CE-c2

Arch-Shaped Part:
Milky-White Acrylic Sheet

Flat Part:
Steel Sheet with Color Paint

Light:
LED+ Downlight(3W, LED)
Emergency Light(5W,LED)

CE-c4

Arch-Shaped Part:
Milky-White Acrylic Sheet with the Crossed Triple Beam

Stripe-Pattern Part:
Steel Sheet with Color Paint

Light:
LED (White)
Emergency Light(5W,LED)

CE-c5

Arch-Shaped Part:
Milky-White Acrylic Sheet with the Two Parallel Triple Beam

Flat Part:
Steel Sheet with Color Paint

Light:
LED (White)
Emergency Light(5W,LED)

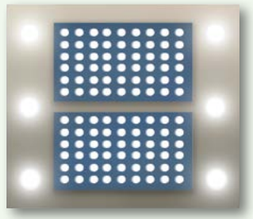

CE-c6

Flat Part:
Milky-White Acrylic Sheet

Flat Panel:
Steel Sheet with Color Paint

Light:
LED (White)
Emergency Light(5W,LED)

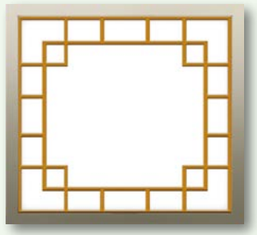

CE-c7

Flat Part:
Milky-White Acrylic Sheet

Flat Panel:
Steel Sheet with Color Paint

Light:
LED (White)
Emergency Light(5W,LED)

Note: Ceiling internal height will vary based on the ceiling types.

Standard Car Design

看得见的精彩，更出色的生活

Ceiling:
CE-g1
Paint Finished Steel Sheet
(TE-a7)

Walls,Transom &door:
Paint Finished Steel Sheet
(TE-a7)

Fan:
Cross-Flow Fan with IONFUL

Car Operating Board:
(FX-h1) Stainless Steel with Hairline

Floor: BD-b2

Sill: Stainless Steel

Clear Ceiling Height: 2350mm
Car Panel Height: 2350mm

CE-g1

The ceiling will be designed by 3 pieces flat plate for deep car with 1350kg and above.

Car Floor (Option)
(PVC Tiles)

BD-b1

BD-b2

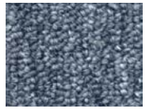

BD-b3

BD-b4

BD-b5

BD-b6

BD-b7

BD-b8

Ceiling: (CE-c4)	Metal Paint (TE-f1)
Walls,Transom &door:	Stainless Steel with Hairline Finish
Fan:	Cross-Flow Fan with IONFUL
Floor:	BD-b5
Sill:	Stainless Steel
Clear Ceiling Height:	2350mm
Car Panel Height:	2500mm

Ceiling: (CE-c7)	Metal Paint (TE-f1)
Walls,Transom &door:	Stainless Steel with Hairline Finish
Mirror:	Stainless Steel with Mirror Finish
Fan:	Cross-Flow Fan with IONFUL
Handrail:	CPH-313F
Floor:	Designed PVC
Sill:	Stainless Steel
Clear Ceiling Height:	2350mm
Car Panel Height:	2500mm

Ceiling: (CE-g5)	Black-Titanium-Coated Stainless Steel with Mirror Finish
Walls,Transom &door:	Steel Panel with Laminate Sheet (W-205)
Mirror:	Stainless Steel with Mirror Finish
Fan:	Cross-Flow Fan with IONFUL
Floor:	Designed PVC
Sill:	Stainless Steel
Clear Ceiling Height:	2350mm
Car Panel Height:	2350mm

Ceiling: (CE-g5)	Paint Finished Steel Sheet (TE-b2)
Walls,Transom &door:	Paint Finished Steel Sheet (TE-b2)
Wall's Center Panels:	Paint Finished Steel Sheet (TE-f2)
Fan:	Cross-Flow Fan with IONFUL
Floor:	BD-b2
Sill:	Stainless Steel
Clear Ceiling Height:	2350mm
Car Panel Height:	2350mm

* Overhead dimension shall increase 150mm for above car design.

FX-g1

Faceplate:
Acrylic Resin
Indicator:
Orange Dot-Matrix LED
Buttons:
Push Buttons

FX-g11

Faceplate:
Acrylic Resin
Indicator:
Multicolor LCD Screen(5.7 inch)
Buttons:
Push Buttons

FX-c1

Faceplate:
Stainless Steel with Hairline Finish
Indicator:
Orange Dot-Matrix LED
Buttons:
Push Buttons

FX-b1

Faceplate:
Stainless Steel with Mirror and Sandblast Finish
Indicator:
Orange Dot-Matrix LED
Buttons:
Push Buttons

FX-b11

Faceplate:
Stainless Steel with Mirror and Sandblast Finish
Indicator:
Multicolor LCD Screen(5.7 inch)
Buttons:
Push Buttons

FX-h1

Faceplate:
Stainless Steel with Hairline Finish
Indicator:
Orange Dot-Matrix LED
Buttons:
Push buttons

FX-h11

Faceplate:
Stainless Steel with Hairline Finish
Indicator:
Multicolor LCD Screen (7 inch)
Buttons:
Push buttons

FX-k1

Faceplate:
Stainless Steel with Hairline Finish
Indicator:
Orange Dot-Matrix LED
Buttons:
Push buttons

FX-k11

Faceplate:
Stainless Steel with Hairline Finish
Indicator:
Multicolor LCD Screen (7 inch)
Buttons:
Push buttons

FX-k12

Faceplate:
Stainless Steel with Hairline Finish
Indicator:
Multicolor LCD Screen (10.4 inch)
Buttons:
Push buttons

Car Operating Boards

FX-g3

Faceplate:	Acrylic Resin
Buttons:	Push Buttons

FX-g31

Faceplate:	Acrylic Resin and Stainless Steel with Hairline Finish
Buttons:	Push Buttons

FX-g4

Faceplate: Acrylic Resin
Indicator: Orange Dot-Matrix LED
Buttons: Push Buttons

FX-g5

FX-g6

FX-g7

FX-g8

Note: Key Switch is Optional.

FX-c4

Faceplate: Stainless Steel with Hairline Finish
Indicator: Orange Dot-Matrix LED
Buttons: Push Buttons

FX-c5

FX-c6

FX-c7

FX-c71

Button

CP-C1

Type:	Resin Button (White)
When Pressed:	Light Emitting Parts: Ring
Lighting Color:	Orange

CP-C3

Type:	Resin Button (White) with Braille Dots
When Pressed:	Light Emitting Parts: Ring
Lighting Color:	Orange

CP-C2

Type:	Resin Button (Black)
When Pressed:	Light Emitting Parts: Ring
Lighting Color:	Orange

CP-D1

Type:	Stainless Steel Button
When Pressed:	Light Emitting Parts: Ring
Lighting Color:	Orange

CP-D3

Type:	Stainless Steel Button with Braille Dots
When Pressed:	Light Emitting Parts: Ring
Lighting Color:	Orange

Hall Fixtures

FX-b4

Faceplate:
Stainless Steel with Mirror and Sandblast Finish

Indicator:
Orange Dot-Matrix LED

Buttons:
Push Buttons

FX-b5

FX-b6

FX-b7

FX-b8

FX-b71

Car Operating Boards

FX-h4

FX-h41

FX-h5

FX-h51

FX-h6

FX-h7

FX-h71

FX-h8

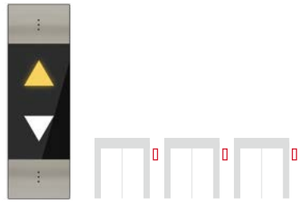

Faceplate:
Stainless Steel with Hairline Finish/Acrylic Resin

Indicator:
Orange Dot-Matrix LED
Multicolor LCD Screen (4.2 inch)

Buttons:
Push buttons

FX-k4

FX-k41

FX-k5

FX-k51

FX-k6

FX-k7

FX-k71

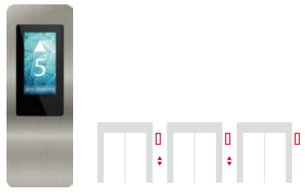

Faceplate:
Stainless Steel with Hairline Finish/Acrylic Resin

Indicator:
Orange Dot-Matrix LED
Multicolor LCD Screen (4.2 inch)

Buttons:
Push buttons

1 Car

2 Cars

Group Supervisory Control

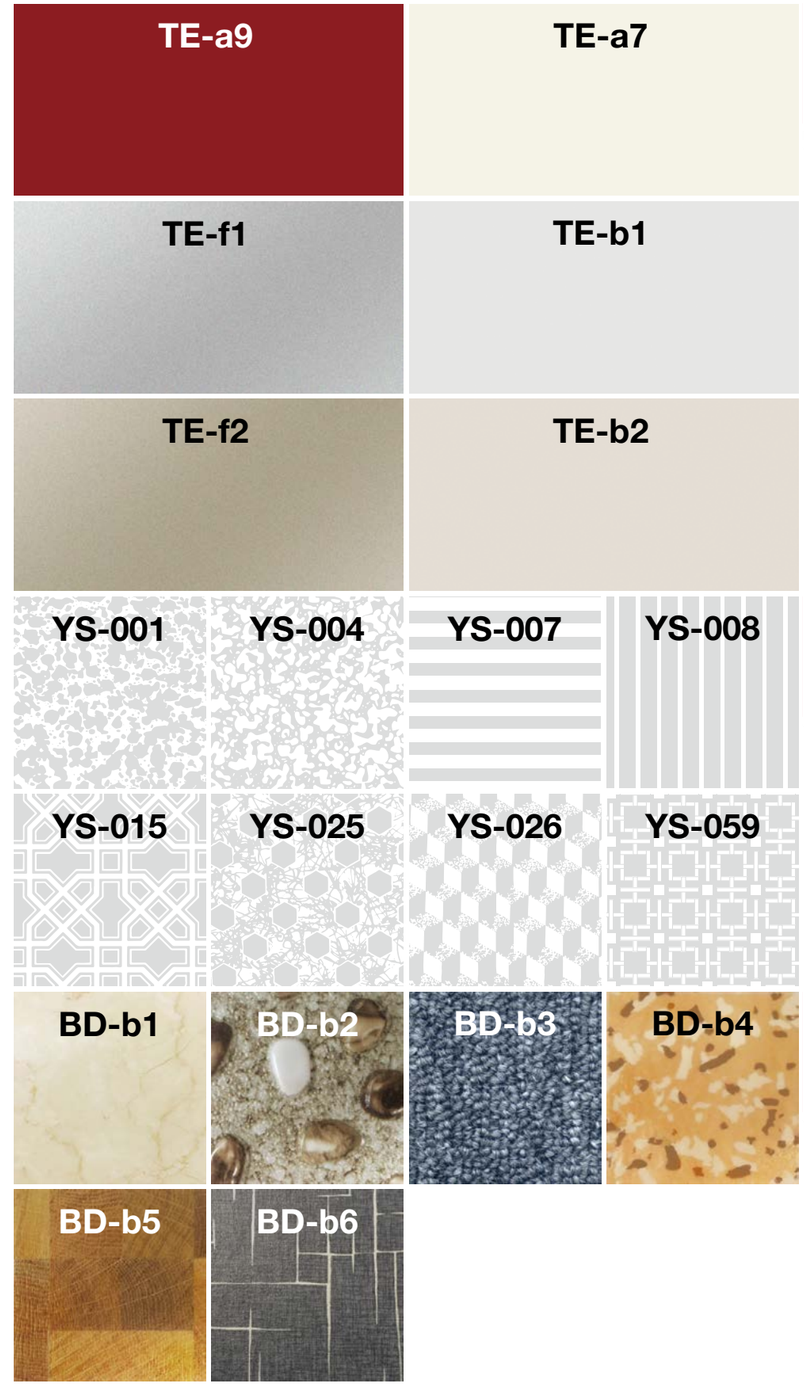

Ceilings, Car Panels, Car Doors, Landing Doors, and Jambs: Paint

Note: The colors of TE-f1 and TE-f2 are optional.
*Actual colors may differ from the images.

Car Panels, Car Doors, and Landing Doors: Stainless Steel with Etching

*The dimensions of an actual pattern differ from the images.

Car Floor (Vinyl Tile)

*The scale and color of an actual design differs from the images.

REXIA

Main Specifications

Capacity
450, 630, 800, 1000, 1200, 1350, 1600, and 2000 kgs

Speed
1.0, 1.5, 1.75, and 2.0 mps
Enquiry-Based Provision: 2.5 mps

(For elevators of 450- or 630- kg load capacity. 2.5 mps is not available.)

Number of Served Floors
30 Stops or Less

Travel Height Main Specifications
80 m or less

Control Method
VVVF controlled by distributed 32-bit Microcomputers.

Traction Machine
Gearless Machine with Permanent Magnetic Synchronous Motor

Types of Elevator Operation
1-Car or 2-Car Selective Collective Operation or Group Control Operation for 3 to 8 Cars in a Bank

Door Operation System
Permanent Magnetic Gearless Motor controlled by VVVF

Door Opening Type
2-Panel Center Opening

The elevators of 450-kg, 1600-kg (Deep-Car Type), and 2000-kg (Deep-Car Type) load capacity are equipped with 2-panel side opening doors as standard.

The above specifications may change without prior notice.

1. Elevator Operation Control System

Control Systems	Details of the Systems
For One Elevator: 1-Car Selective Collective Operation (Simplex)	Landing calls in the direction in which the elevator is traveling are served sequentially. After all the landing calls are served, landing calls in the opposite direction will be served. When there are no incoming calls, the elevator stops and stays at the last served floor.
For Two Elevators in a Bank: 2-Car Selective Collective Operation (Duplex)	Two selective-collective-operation elevators work together in one group. Landing calls are served by either elevator that can respond first. When there are no calls, one will be on standby at the main floor; the other will stay at the last served floor.
For Three to Eight Elevators in a Bank (Group Control Operation)	The operation of more than two elevators in a bank is controlled by a group supervisory system which calculates passenger waiting time in advance based on the accumulated traffic data, such as passenger travel patterns and passenger volume at each floor, etc.

2. Functions and Specific-Purpose Operations, etc.

Functions and Specific-Purpose Operations, etc.		Details	●: Standard /	■: Optional
Passenger-Safety Functions	Alarm Buzzer	When the emergency button is pressed, the car-top-mounted buzzer will sound an alarm.	●	
	Rescue Operation to Nearest Floor	In the event that an elevator stops between floors, a safety circuit will automatically analyze the situation and slowly move the elevator to the nearest available floor.	●	
	Automatic Releveling	In the event that an elevator floor isn't leveled with the landing floor, the Automatic Releveling function will initiate and make the elevator floor flush with the landing floor.	●	
	Emergency Car Lighting	In the event of a power failure, a self-charging-battery-equipped emergency lighting system will light up the elevator for passenger safety and relief.	●	
	Five-Way Intercom	An intercom for 5-way communication is installed in the elevator. It allows 4 remote telephones to communicate with the elevator; one on the car top, one in the pit, one in the machine room and one in the building-system control room.	●	
	Multi-Beam Sensor	A multi-beam sensor emits multiple infrared beams covering the entire doorway. If a single beam is interrupted, the sensor will stop the closing doors and reopen them.	●	
	Multi-Beam Sensor with Mechanical Safety Edge	A multiple-beam sensor can be incorporated in mechanical safety edges of elevator doors.		■
	Night-Time Self-Checking Operation	During the night time when the elevator doesn't receive any car and hall calls, the system will move the elevator and check the mechanical brake conditions automatically.	●	
	Open Door Warning	If a passenger tries to forcibly open the doors while the elevator is in operation, the warning device will sound an alarm.	●	
	Unintended Car Movement Protection (UCMP)	The Unintended Car Movement Protection system prevents elevator movement from the landing floor, while passengers are entering and getting off the elevator.	●	

The above functions may change without prior notice.

Systems & Functions

Functions and Specific-Purpose Operations, etc.		Details	●: Stanadard	■ : Optional
Efficient-Operation Functions	Anti-Nuisance Function	1) For elevators with three or more landings, when three or more car calls are registered at the same time, or when four or more car calls are registered in an extremely short period of time, the system will automatically cancel the activated car calls. 2) For elevators with five or more landings, when an elevator loaded with 100 kg or less receives four or more car call registrations, the system will cancel all the activated registrations.	●	
	Auto Adjustment of Door Open Time	This function automatically adjusts the door-hold open time (dwell time) at each floor depending on passengers' hall- and car- call registration situations.	●	
	Automatic Return to Main Floor (for 2-Car & Group Control Operation)	When an elevator does not receive any car- or hall- calls for a certain period of time, the Automatic Return to Main Floor function makes the elevator go to the lobby or a predetermined floor and waits in standby for passengers to board.	●	
	Door Nudging	If the car doors are held open over a given period of time, the Door Nudging function will close them slowly with an audible alarm.	●	
	Auto-Separation after Elevator Failure (for Group Control Operation)	When an elevator under group control operation fails to operate normally, it will be separated from the elevator group so as not to affect the overall group elevator performance.		■
	Load Bypass (for 2-Car & Group Control Operation)	When a traveling car is fully loaded, it will bypass floors where hall calls are registered. Those hall calls will be assigned to another available elevator.		■
	Overload Warning	When a car becomes overloaded, the warning alarm will sound. The elevator doors will not close until the overloaded state is resolved.	●	
	Reverse-Direction Car-Call Cancellation	In the event that a passenger tries to register a car call that is behind the car's current travelling direction, the elevator system will regard it as a nuisance call and ignore it in order to maintain the elevator service efficiency.	●	
	Wrong Car-Call Register Cancellation	In case a passenger presses the wrong car call button, this mistake can be cancelled by pushing the same button twice.	●	
Passenger-Comfort Functions	Arrival Chime (In Car)	When a car arrives at a destination floor, an arrival chime will sound softly.		■
	Attendant Operation	By using attendant-operation buttons inside a car operating board's cabinet, authorized personnel can register car calls for in-car passengers. In addition to monitoring incoming hall calls, the attendant decides the car travel direction and operates the car doors with priority service for in-car passengers.	●	
	Automatic Voice Announcement System (VONIC)	A computerized voice system provides passengers with timely information about car directions, car arrivals, door opening and closing, and emergencies, etc. At the customer's request, announcements in other languages can be added.		■
	Plasmacluster™ Ion Generating Device (IONFUL)	Plasmacluster Ion Generating Device to be built into a car's ventilation unit creates clean air for passenger comfort by disinfecting germs, odor molecules, bacteria, viruses, and allergens in the elevator.	●	
	Visual Display on Car Operating Board	Informing on an elevator's current condition, a visual display on the car operating board will provide passengers with timely text messages such as "OVERLOADED", "EMER. OPERATION", "PLEASE EXIT THE ELEVATOR." etc.	●	
	Visual Display on Landing Fixture	Informing on an elevator's current condition, a visual display on the landing fixture will provide waiting passengers with timely text messages such as "OVERLOADED", "EMER. OPERATION", etc.		■

The above functions may change without prior notice.

Functions and Specific-Purpose Operations, etc.		Details	●: Standard /	■: Optional
Energy-Saving Functions	Automatic Fan and Light Control	If an elevator receives no car- and hall- calls within a certain period of time, its ventilation fan and lights will turn off automatically.	●	
	Elevator Operation Period Control	The elevator operation period in a day is automatically controlled by a timer mounted on the control panel's computer board in the machine room.		■
	Parking Operation	When an elevator is shifted to Parking Operation mode, the elevator will move to the pre-assigned floor and park with its doors closed, and car lights and fan turned off.		■
Specific-Purpose Operations	Battery-Powered Automatic Landing Operation (LANDIC)	In the event of a power failure, a compact battery power source will move the car to the nearest available floor.		■
	Door Opening Failure Rescue Operation	When an elevator fails to open the doors at a landing floor, it will move to the next available floor and open them.	●	
	Earthquake Rescue Operation (WAVIC)	When a seismic sensor has detected a seismic wave (the secondary seismic wave), the elevator(s) will be shifted to rescue operation mode and automatically move to the nearest available floor for passenger evacuation.		■
	Fire Operation	In the event of a fire, the Fire Operation mode will automatically take an elevator directly to an evacuation floor and immobilize it there.	●	
	Firefighter Operation	The Firefighter Operation mode allows firefighters to use an elevator during a fire. Under this mode, the elevator responds only to car call registrations made by firefighters.		■
	Independent Operation	When Independent Operation is turned on, a designated elevator can operate independently for exclusive use.	●	
	Standby Power Operation	In the event of a power failure, the elevator(s) will return to an evacuation floor using standby power and will be held there on standby. * Standby power system shall be provided and installed by third parties.		■
Equipment for Building Security, etc.	Building-Management-System (BMS) Interface	Through a purpose-built interface, a building management system can receive up-to-date elevator operation data.		■
	CCTV-Camera Cables (between a car and a machine-room elevator control panel)	For a CCTV camera, video-signal cables suitable for the hoistway and / or machine room are available.		■
	Elevator Operation Supervisory Panel (such as watching board, console panel, etc.)	Through an elevator operation supervisory panel, the statuses of elevator operation can be monitored and the elevator operation controlled.		■
	Elevator Visual Monitoring System (ELVIC)	By monitoring the current statuses of running elevators and giving necessary commands to elevators through desk-top PCs in a specific remote location, ELVIC manages and controls elevator operation. (Desk-top PCs shall be provided by the customer.)		■
	In-Car Power Receptacle	A power receptacle can be installed in an elevator. (Maximum allowable wattage: 1 kW)		■

The above functions may change without prior notice.

2-Panel Left Side Opening Door (2SL)(Opposite for 2SR)

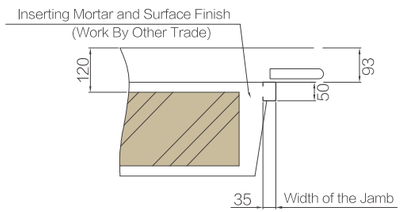

See Pg.30, 31 A (Left Side of the Narrow Jamb)

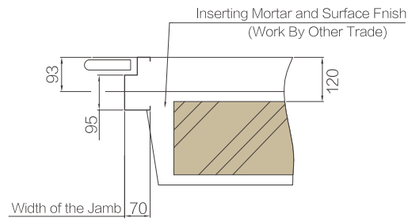

See Pg.30, 31 B (Right Side of the Narrow Jamb)

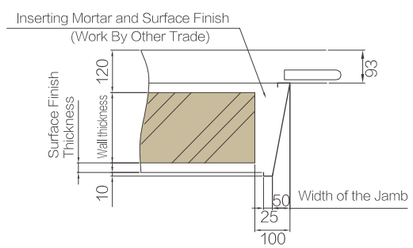

See Pg.30, 31 A (Left Side of the Wide Jamb)

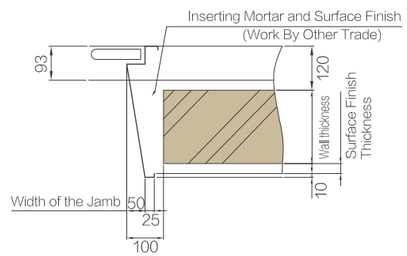

See Pg.30, 31 B (Right Side of the Wide Jamb)

2-Panel Center Opening(2CO)

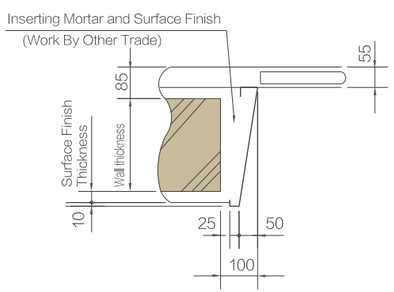

Wide Jamb

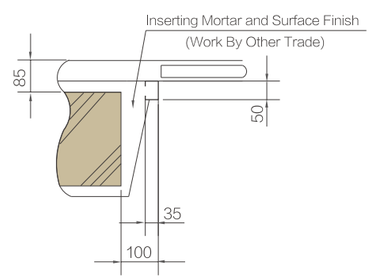

Narrow Jamb

Note: The above dimensions are for reference only. The actual engineering design data shall be used.
The wide jamb for fire rated door is different from above, which should be confirmed job by job.

Planning (for 630kg)

Standard Specification (Wall Mounted Type)

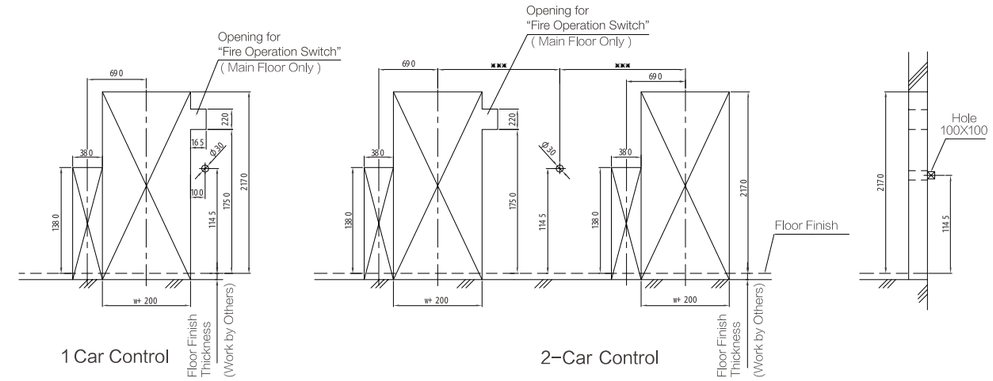

Optional Specification (Wall Mounted Type)

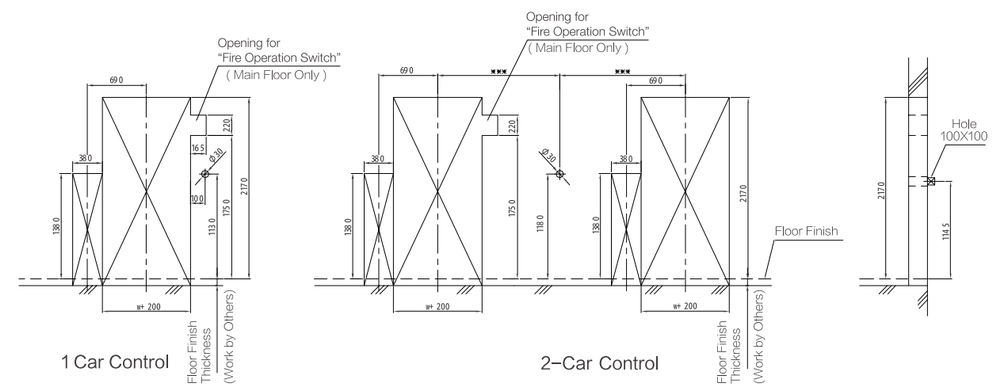

Optional Specification (Box Type)

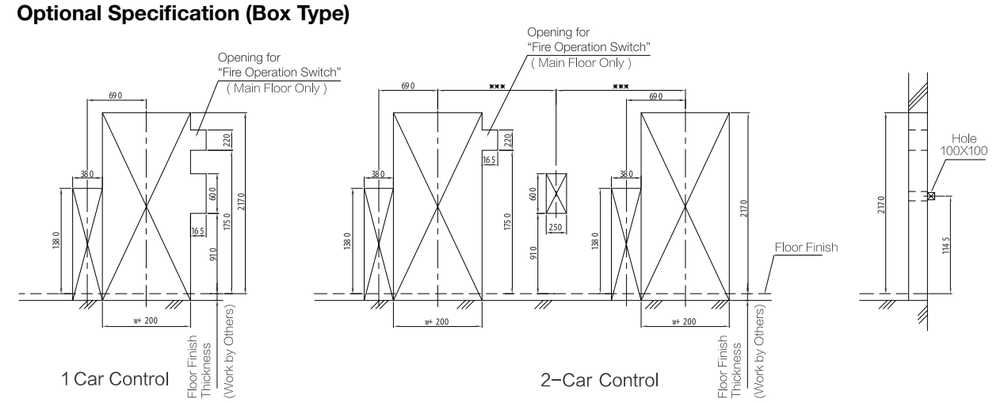

Note: The above dimensions are for reference only. The actual engineering design data shall be used.

Planning

Planning (except for 630kg)

Standard Specification (Wall Mounted Type)

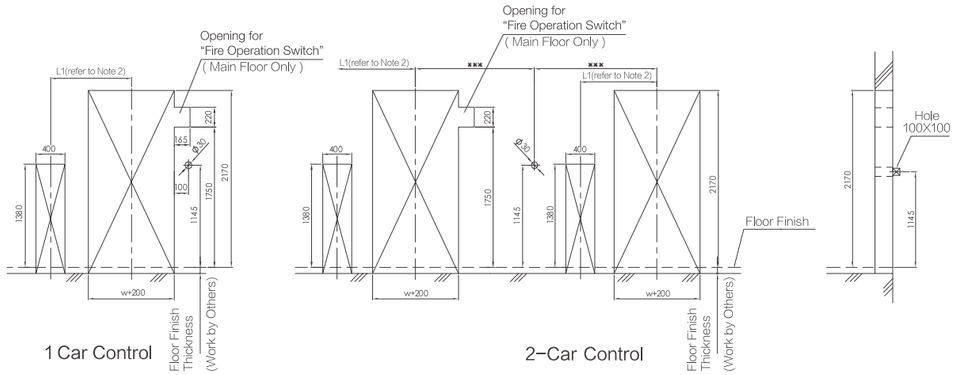

Optional Specification (Wall Mounted Type)

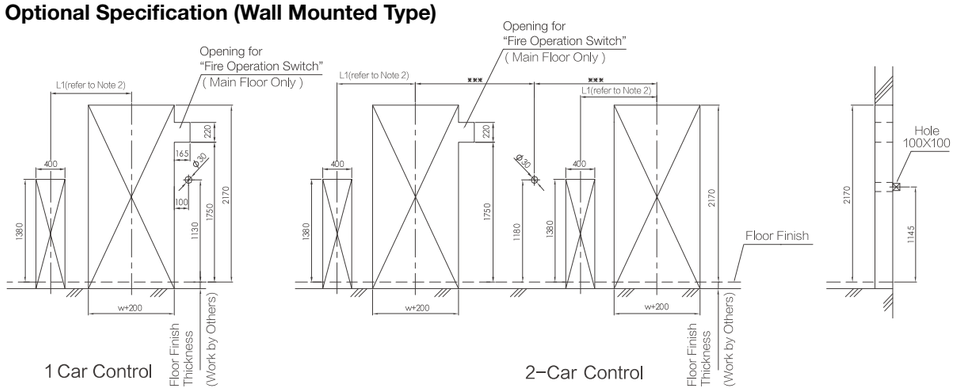

Optional Specification (Box Type)

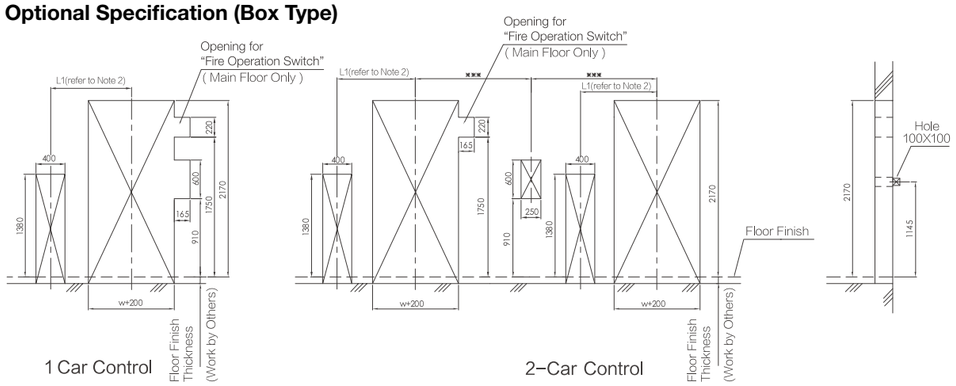

Note2:

Capacity (kg)	450kg	800kg (Wide Car)	800kg (Deep Car)	1000kg (Wide Car)	1000kg (Deep Car)	1200kg (Wide Car)	1200kg (Deep Car)	1350kg (Wide Car)	1350kg (Deep Car)	1600kg (Wide Car)	1600kg (Deep Car)	2000kg (Wide Car)	2000kg (Deep Car)
L1(mm)	775	885	760	1010	775	1150	825	1245	825	1300	1140	1470	1220

Note: The above dimensions are for reference only. The actual engineering design data shall be used.

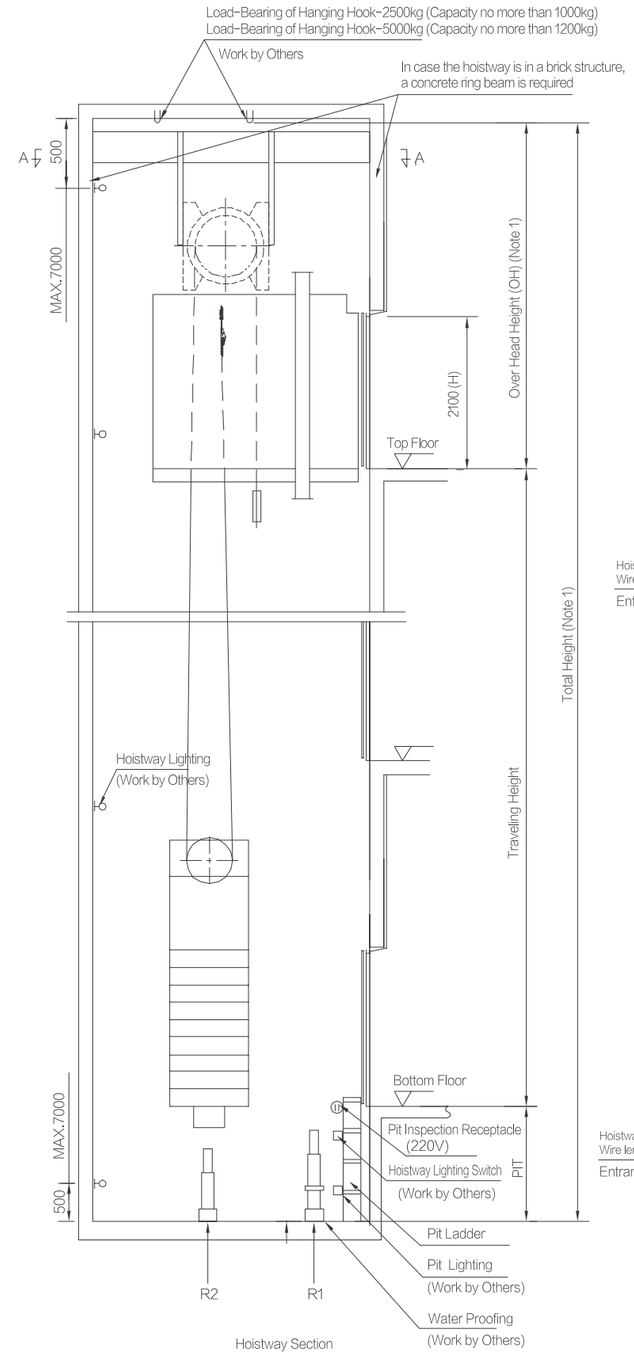

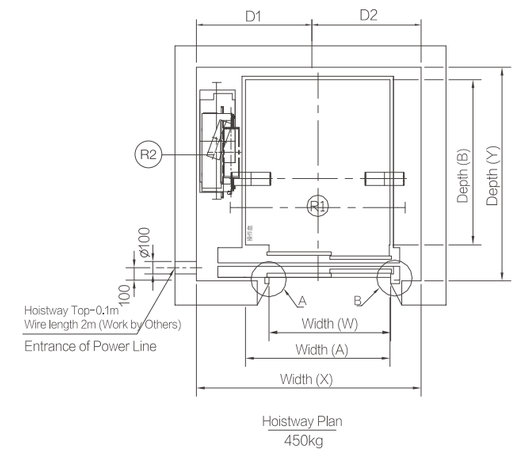

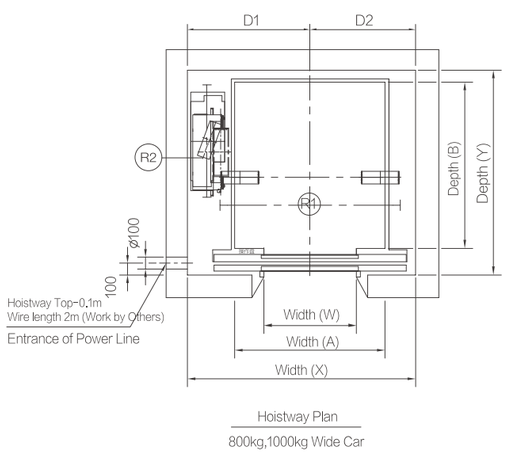

*1. The above dimensions are for reference only. The actual engineering design data shall be used.
*2. The above dimensions are based on RC-structure hoistway.
*3. The above hoistway's internal dimensions are based on the hoistway with waterproof finish.
*4. If hoistway's internal dimensions are too large, intermediate beams shall be provided and installed by others based on Fujitec-submitted drawings.
*5. The required thickness of the hoistway's structural walls is 150mm or more (not including the thickness of wall finish).

Planning

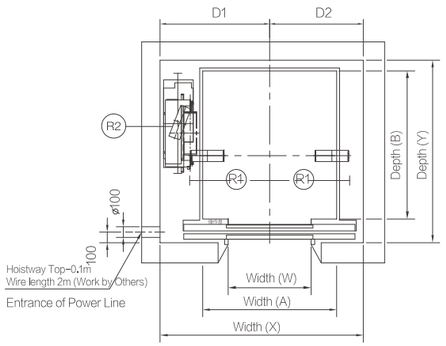

Hoistway Plan

1200kg-2000kg Wide Car

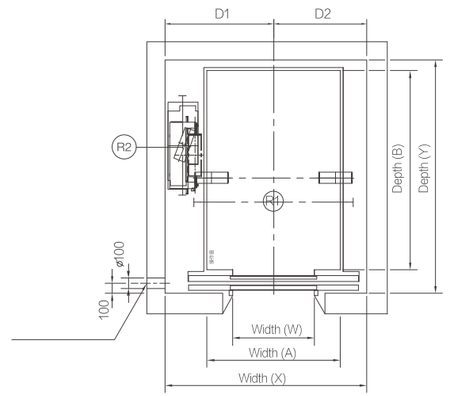

Hoistway Plan

630kg,800kg,1000kg Deep Car

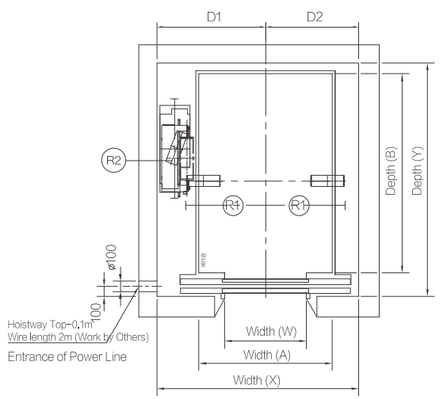

Hoistway Plan

1200kg,1350kg Deep Car

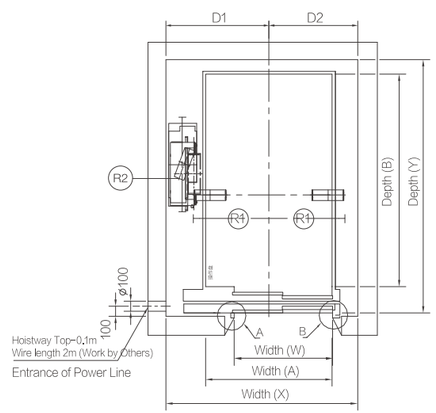

Hoistway Plan

1600kg,2000kg Deep Car

(In case the capacity is 2000kg,
COB is placed in the front side)

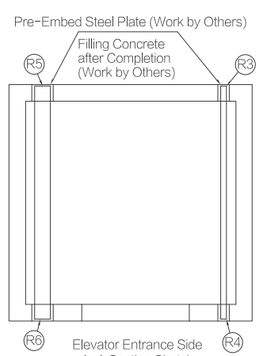

Elevator Entrance Side
A-A Section Sketch

Note 1: Measure from the lower end of the hook

Capacity (kg)	450kg	630kg	800kg (Wide Car)	800kg (Deep Car)	1000kg (Wide Car)	1000kg (Deep Car)	1200kg (Wide Car)
D1	X/2+95	X/2+52.5	X/2+92.5	X/2+30	X/2+110	X/2	X/2+75
D2	X/2- 95	X/2- 52.5	X/2- 92.5	X/2- 30	X/2- 110	X/2	X/2- 75

Capacity (kg)	1200kg (Deep Car)	1350kg (Wide Car)	1350kg (Deep Car)	1600kg (Wide Car)	1600kg (Deep Car)	2000kg (Wide Car)	2000kg (Deep Car)
D1	X/2+100	X/2+120	X/2+100	X/2+122.5	X/2+145	X/2+45	X/2+145
D2	X/2- 100	X/2- 120	X/2- 100	X/2- 122.5	X/2- 145	X/2- 45	X/2- 145

*1. The above dimensions are for reference only. The actual engineering design data shall be used.
*2. The above dimensions are based on RC-structure hoistway.
*3. The above hoistway's internal dimensions are based on the hoistway with waterproof finish.
*4. If hoistway's internal dimensions are too large, intermediate beams shall be provided and installed by others based on Fujitec-submitted drawings.
*5. The required thickness of the hoistway's structural walls is 150mm or more (not including the thickness of wall finish).

Relevant Dimensions

Wide Car

Capacity (kg)	Speed (m/s)	Opening Type	Car Inside A x B (mm)	Opening W x H (mm)	Hoistway X x Y (mm)	Pit Depth P (mm)	Overhead OH (mm)	Pit reaction (kN)		Hoistway Top reaction (kN)			
								R1	R2	R3	R4	R5	R6
800	1.0	2CO	1350x1400	800x2100	1985x1690	1280	3730	97	81	18	29	60	50
	1.5					1370	3850						
	1.75					1420	3940						
	2.0					1500	4050						
1000	1.0	2CO	1600x1400	900x2100	2200x1690	1280	3730	103	84	20	33	80	70
	1.5					1370	3850						
	1.75					1420	3940						
	2.0				2250x1690	1600	4050						
1200	1.0	2CO	1800x1500	1100x2100	2550x1810	1340	3750	80	136	25	38	110	85
	1.5					1490	3930						
	1.75					1540	4050						
	2.0					1600	4150						
1350	1.0	2CO	2000x1500	1100x2100	2650x1810	1450	3750	85	143	30	42	115	90
	1.5					1570	3930						
	1.75					1700	4030						
	2.0				2700x1810	1700	4150						
1600	1.0	2CO	2100x1600	1100x2100	2755x1890	1450	3750	92	152	35	45	120	95
	1.5					1600	3930						
	1.75					1700	4030						
	2.0				2800x1890	1700	4150						
2000	1.0	2CO	2350x1700	1200x2100	3050x1990	1450	3800	100	160	40	50	130	100
	1.5					1650	3930						
	1.75					1720	4030						
	2.0					1720	4150						

Relevant Dimensions

Deep Car

Capacity (kg)	Speed (m/s)	Opening Type	Car Inside A x B (mm)	Opening W x H (mm)	Hoistway X x Y (mm)	Pit Depth P (mm)	Overhead OH (mm)	Pit reaction (kN)		Hoistway Top reaction (kN)			
								R1	R2	R3	R4	R5	R6
450	1.0	2SL	1000x1200	800x2100	1570X1600	1260	3730	83	70	18	25	50	35
	1.5					1350	3850						
	1.75					1410	3940						
	2.0					1500	4050						
630	1.0	2CO	1100X1400	800x2100	1775X1690	1280	3730	86	73	18	26	55	40
	1.5					1370	3850						
	1.75					1420	3940						
	2.0					1500	4050						
800	1.0	2CO	1100X1800	800x2100	1860X2090	1280	3730	97	81	18	29	60	50
	1.5					1370	3850						
	1.75					1420	3940						
	2.0					1500	4050						
1000	1.0	2CO	1100X2100	900x2100	1950X2390	1280	3730	103	84	20	33	80	70
	1.5					1370	3850						
	1.75					1420	3940						
	2.0					1600	4050						
1200	1.0	2CO	1300X2100	900x2100	2000X2390	1340	3750	80	136	25	38	110	85
	1.5					1490	3930						
	1.75					1540	4050						
	2.0					1600	4150						
1350	1.0	2CO	1300X2300	900x2100	2000X2590	1450	3750	85	143	30	42	115	90
	1.5					1570	3930						
	1.75					1700	4030						
	2.0					1700	4150						
1600	1.0	2SL	1400X2400	1200X2100	2200X2770	1450	3750	92	152	35	45	120	95
	1.5					1600	3930						
	1.75					1700	4030						
	2.0					1700	4150						
2000	1.0	2SL	1500X2700	1200x2100	2270X3080	1450	3800	100	160	40	50	130	100
	1.5					1650	3930						
	1.75					1720	4030						
	2.0					1720	4150						

Notes: 1. The data shown above may vary based on elevator specification arrangement.
2. Refer to the Work Done by Others for the Acceptable Inclination of Hoistway's Vertical Centerline.

Power Supply Data

Capacity (kg)	Speed (m/s)	Motor Power (kw)	Rated Current (A)	Acceleration Current (A)	Equivalent Current (A)	Power Capacity (KVA)	Open-Circuit Current (A)	Allowable Maximum Length of Main Power Feeder Line (m)								Heat Generation Rate in Machine Room (Kjh)	Air Ventilation Rate in Machine Room(m^3/h)
								25 mm^2	35 mm^2	50 mm^2	70 mm^2	95 mm^2	120 mm^2	150 mm^2	185 mm^2		
450	1.0	3.1	11	18	4	5	16	595	811	1063	1440	1860	2611	3133	3675	2850	340
	1.5	4.9	15	27	5	7	20	443	604	791	1071	1384	1943	2331	2735	4250	500
	1.75	5.4	17	31	6	7	20	389	531	695	942	1217	1709	2051	2405	4950	590
	2.0	6.1	21	40	7	8	25	316	431	565	766	989	1388	1666	1954	5700	670
630	1.0	4.3	17	28	5	6	20	389	531	696	943	1218	1709	2051	2406	4000	470
	1.5	6.8	24	44	7	9	25	268	366	479	649	839	1177	1413	1657	5950	700
	1.75	7.5	25	46	8	10	32	255	348	456	619	799	1122	1346	1579	6950	820
	2.0	8.5	28	52	9	11	32	230	314	412	558	721	1012	1214	1424	7950	940
800	1.0	5.5	20	30	5	8	20	329	449	588	797	1029	1444	1733	2033	5050	600
	1.5	8.7	30	51	8	11	32	214	292	383	519	670	941	1129	1324	7550	890
	1.75	9.5	33	56	9	12	40	196	268	351	475	614	862	1035	1214	8800	1040
	2.0	11.0	36	64	11	14	40	178	243	318	432	558	783	940	1102	10050	1190
1000	1.0	6.8	24	35	6	9	25	267	364	477	646	835	1172	1407	1650	6300	740
	1.5	10.9	36	57	9	13	40	180	245	322	436	563	791	949	1113	9450	1110
	1.75	11.9	37	60	10	15	40	171	233	305	414	535	751	901	1057	11000	1300
	2.0	13.6	42	70	12	16	50	151	206	270	366	473	665	798	936	12600	1480
1200	1.0	8.2	27	40	7	11	32	238	324	425	576	744	1045	1254	1470	7550	890
	1.5	12.2	39	63	10	15	40	164	224	293	397	513	721	865	1015	11350	1340
	1.75	14.2	45	74	12	17	50	142	194	255	345	446	627	752	882	13200	1560
	2.0	16.3	50	85	14	20	63	128	174	228	310	400	562	674	791	15100	1780
1350	1.0	9.6	31	45	8	12	32	209	285	373	506	654	917	1101	1291	8500	1000
	1.5	13.7	45	71	12	17	50	142	193	253	344	444	623	748	877	12750	1500
	1.75	16.0	49	78	13	19	50	131	179	234	318	411	577	692	812	14850	1750
	2.0	18.0	56	94	16	22	63	113	154	202	274	354	497	597	700	17000	2000
1600	1.0	10.9	33	49	9	14	40	194	265	347	470	607	852	1023	1200	10050	1190
	1.5	16.2	50	77	12	20	63	127	174	228	309	399	560	672	788	15100	1780
	1.75	19.0	55	90	14	22	63	116	159	208	282	365	512	615	721	17600	2070
	2.0	21.8	60	106	17	25	63	106	145	190	258	333	467	561	658	20100	2370
2000	1.0	13.6	38	52	9	16	40	168	229	300	406	525	737	884	1037	12600	1480
	1.5	20.4	61	88	14	24	63	105	143	187	254	328	460	552	648	18850	2220
	1.75	23.8	67	98	17	28	80	95	130	171	232	299	420	504	592	22000	2590
	2.0	27.2	74	113	19	31	80	86	117	154	209	270	379	455	533	25150	2960

Notes: 1. The data shown above may vary based on elevator specification arrangement.
2. Earthling wires shall be arranged ans installed based on local elevator code requirement.

Work Done by Others

1. Elevator Hoistway Environment

Hoistway Temperature	Hoistway temperature shall be kept from 5 °C (41 °F) to 40 °C (104 °F).
Relative Humidity	1. When a temperature reaches at 40 °C (104 °F), the relative humidity does not go beyond 50%. 2. In the year's most humid month(s), relative humidity shall be kept lower than 90 % and the temperature lower than 25°C (77 °F). 3. Dew condensation prevention measures shall be taken, if there are the possibilities that condensation form inside and on electrical equipment.

2. Electric Power Source

Type of Power Supply	1. Three-Phase Power Supply for Elevator Driving Machine 2. Single-Phase Power Supply for Lighting Equipment
Allowable Error of Voltage Value	The allowable error of voltage value is 7 % above and below the rated voltage.

3. Acceptable Inclination of Hoistway's Vertical Centerline

Hoistway's Vertical Length	Centerline's Tilt away from the Plumb Line (unit: mm)
30 meter or less	0 to 25 mm or less
more than 30 m up to 60 m or less	0 to 35 mm or less
more than 60 m	0 to 50 mm or less

4. Work done by Others

The following items are in the scope of other contractors' work, not covering all items done by them.

For Hoistway

1.	Construct solid-state, fire-proof elevator hoistway.
2.	Cut out landing walls for Fujitec's installation of elevator operating fixtures and elevator equipment.
3.	Do wall finishing work by filling cement between jambs and landing walls.
4.	Do wall finishing work by filling cement between landing fixtures and landing walls.
5.	Give water-proofing and drainage treatment in elevator pit including the installation of pumping equipment.
6.	Install space divider screens between respective elevators in a hoistway pit.
7.	Install steel separator beams at regular vertical intervals in a hoistway.
8.	When hoistway is constructed with bricks, put steel lintels in its walls for Fujitec's installation of rail brackets. The steel lintels must be completely fixed inside the walls. The vertical height of the lintel is required to be 300 mm or more. For details, see the relevant drawings.
9.	When an elevator traveling distance from a floor to the next is more than 11 m, make an opening on the hoistway wall between the floors and install emergency exit doors in the opening for passenger evacuation.
10.	It is advised that there is no human access to the space below the hoistway pit.
11.	When the bottom of a hoistway pit is deeper than the required level, add backfill concrete up to the required level.
12.	Provide and install a pit ladder based on the layout drawings.
13.	Provide and install a power switching / distributing board in the hoistway.
14.	Provide and install electrical pipes, wires, and leads in the hoistway. They shall be extended from the power switching / distributing board to the controller, machine, and their related apparatuses.
15.	Provide and install all of electricity supply apparatuses (inclusive of pipes, leads, wires, etc.) on various routes from the building's electricity supply system to the hoistway, landing floors and Fujitec-designated locations.
16.	Install air ventilator(s) and/or air conditioner(s) in order to keep the hoistway temperature between 5 °C (41 °F) and 40 °C (104 °F).
17.	Provide and install electrical outlets inside the hoistway.
18.	Install lighting equipment of 30 watt or more at 7-meter intervals inside the hoistway with 0.5-meter clearance at the top and bottom of the hoistway. The lighting intensity is required to be 50 lux or more at the car-top working platform and at the 1-meter high position above the pit bottom.
19.	Make holes in the walls of a hoistway for Fujitec's installation of machine support beams and fill concrete into the gap between the walls and the fixed beams.
20.	Cut out landing walls and install emergency operation panels for Fujitec's emergency access to and operation of elevator machine and brake.
21.	Install machine lifting hooks and / or beams on the hoistway's ceiling slabs. The required lifting load capability is stated on the relevant installation drawings.

1.	Ground-fault circuit interrupter and current leakage alarm are required to be protected against current-harmonic distortion.
2.	Lay building's telecommunication lines 500 mm away from the electric feeder lines for elevator system.
3.	Remove corroded metal materials from the hoistway.
4.	Protect the hoistway against hazardous gas.
5.	Prevent dust from accumulating in the hoistway.
6.	Provide a storage room in order to stock elevator parts and installation materials.
7.	Do not place any tools and materials not related to elevators in the hoistway.

FUJITEC

Reach Impossible height Mountain Shuttle Elevator

Fujitec Global Operations


Ohaio Plant(U.S.A)


Langfang Plant(China)


Shanghai Plant(China)


Korea Plant


Taiwan Plant

Big Wing (Grope Headquarters in Japan, Elevator Plant)


Shingapore Plant


India Plant

North & South America

FUJITEC AMERICA.,INC.
FUJITEC CANADA.,INC.
FUJITEC VENEZUELA C.A.
FUJITEC ARGENTINA S.A.
FUJITEC URUGUAY S.A.

Japan

FUJITEC CO.,LTD.

East Asia

FUJITEC (HK) CO., LTD.
FUJITEC TAIWAN CO.,LTD.
FUJITEC KOREA CO.,LTD.
HUASHENG FUJITEC ELEVATOR CO.,LTD.
SHANGHAI HUASHENG FUJITEC ESCALATOR CO.,LTD.
FUJITEC SHANGHAI TECNOLOGIES CO.,LTD.
FUJITEC SHANGHAI SOURCING CENTER CO.,LTD.

Europe & Middle East

FUJITEC UK LTD.
FUJITEC SAUDI ARABIA CO.,LTD.
FUJITEC EGYPT CO.,LTD.
FUJITEC UAE (DUBAI) OFFICE

South Asia

FUJITEC SINGAPORE CORPN. LTD.
FUJITEC INC,(PHILIPPINES)
FUJITEC (MALAYSIA) SDN, BOD.
P.T. FUJITEC INDONESIA
FUJITEC VIETNAM CO., LTD.
FUJITEC INDIA PRIVATE LTD.
FUJITEC (THAILAND) CO., LTD.
FUJITEC LANKA (PRIVATE) LTD.
FUJITEC PACIFIC, INC.(GUAM)
FUJITEC MYANMAR CO., LTD.

FUJITEC

www.fujitec.com

REX161110AS

FUJITEC

REXIA

Machine-Room-Less Elevator